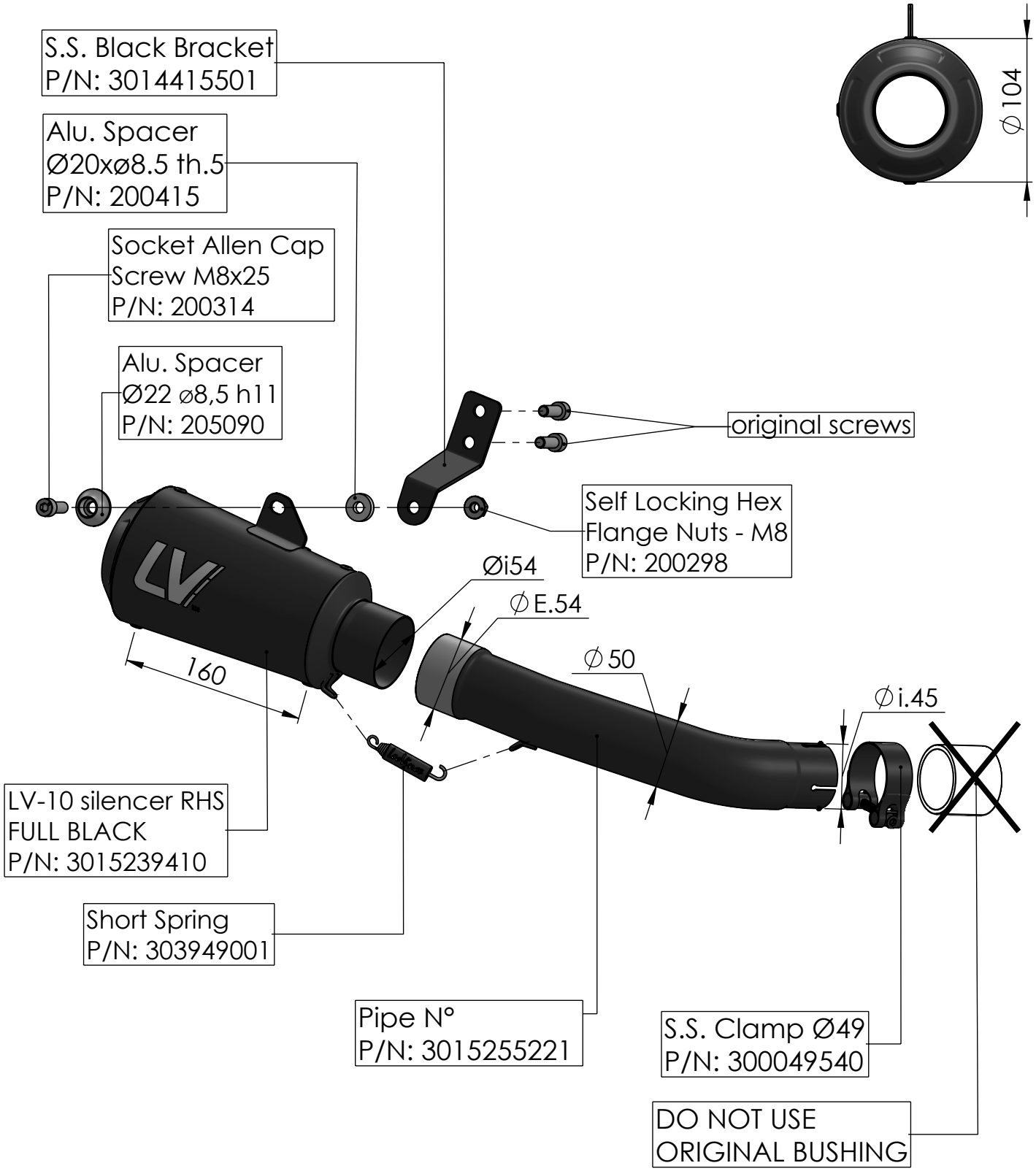

ART. 15255FB

KTM RC 125 / RC 390

SLIP-ON / LV-10 / FULL BLACK