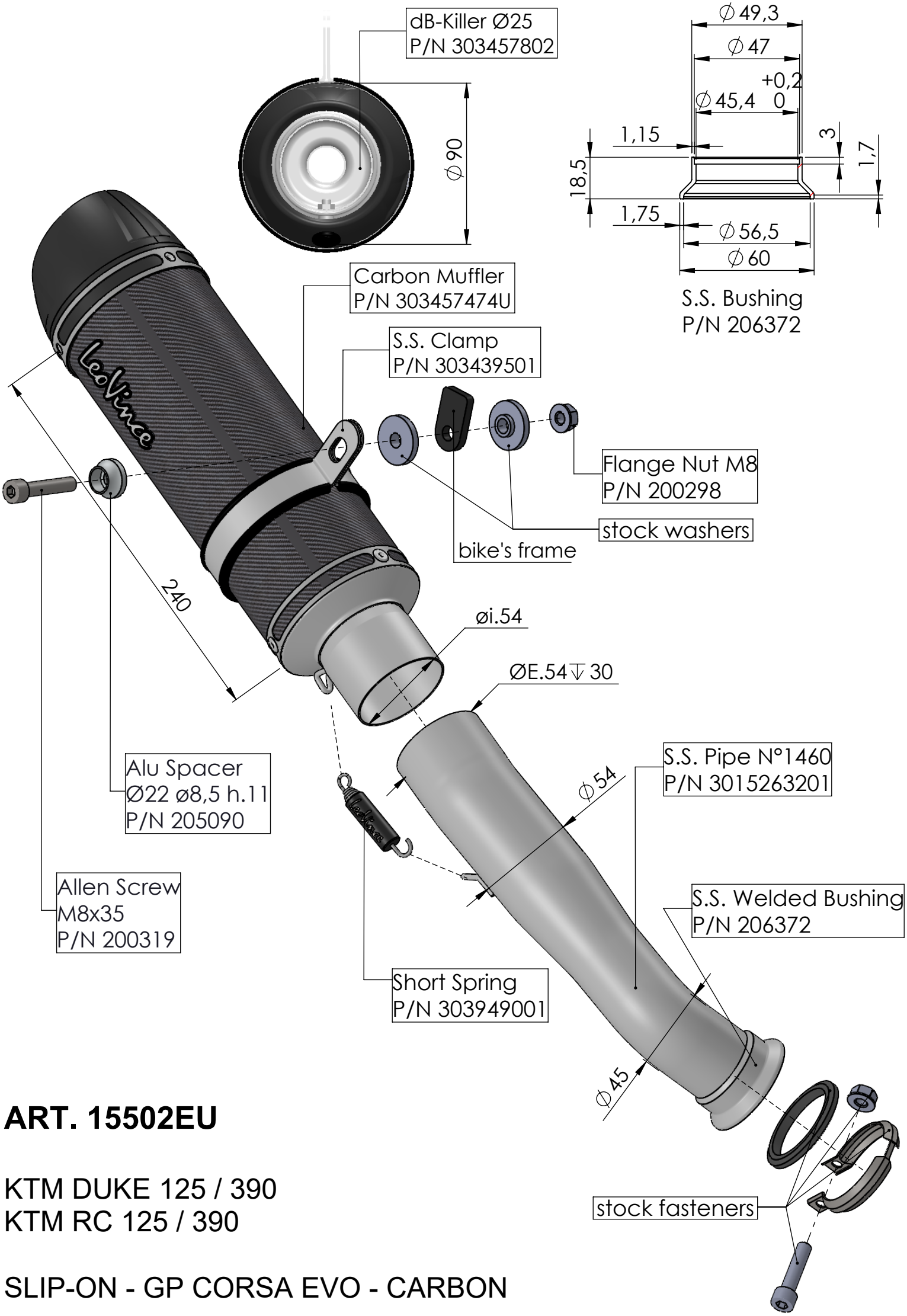

ART. 15502EU

KTM DUKE 125 / 390
KTM RC 125 / 390

SLIP-ON - GP CORSA EVO - CARBON